D1RFRD006

REVISION RECORD				
REV	ECO	DESCRIPTION	DRFT	DATE
1		Drawing Revise	Home	05/08/06"
2		品名、料号增加环保标示"(H)"	LJH	12/10/07"
3		修改料号及塑件增加防掉脱点	LJH	01/26/08"
4		增加商标,品名及UL,CE刻字	Zengy	09/06/08"
5		增加VDE刻字	Zengy	02/04/09"
6		修改螺丝防脱卡点位置及尺寸	WLM	04/21/09"

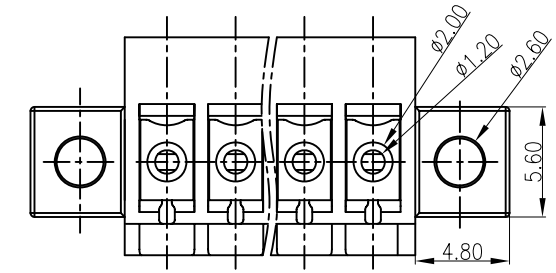

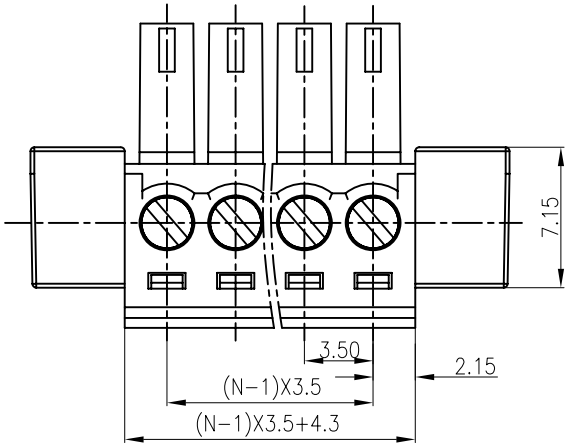

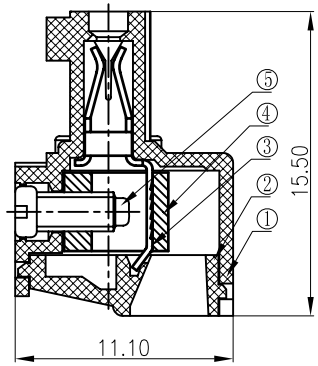

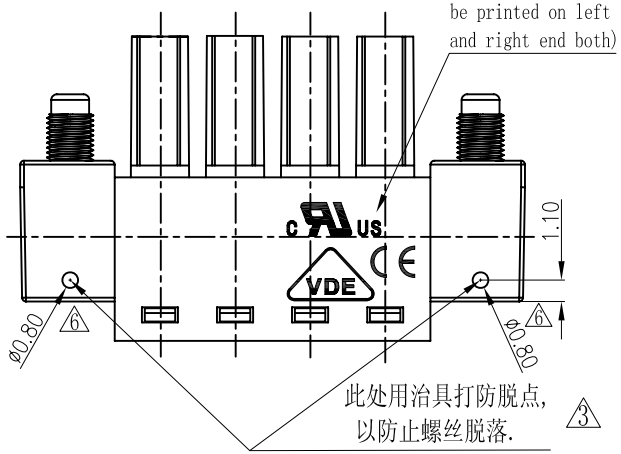

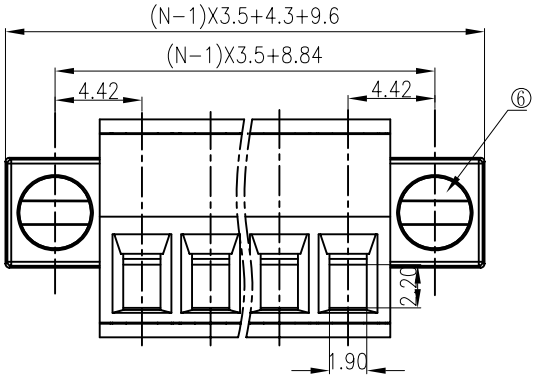

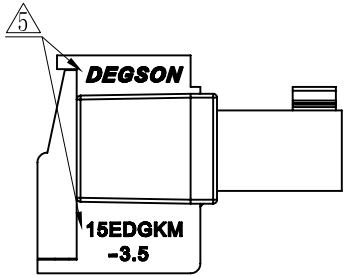

Notes:

1. Pitch:3.5mm ,Poles:2-24P
2. Rated voltage/current:UL 300V/8A
   VDE 250V/7A
3. Operation temperatures:-40℃～+105℃
4. Withstanding Voltage:AC2000V/1Min
5. Insulation Resistance:5000MΩ/DC1000V
6. Wire Range:28-16AWG,0.5-1.5mm²
7. Max.Torque Value:M2,2.04kgf.cm
8. Undimensioned Tolerances:

Pitch range in mm			Naminal dimension range in mm					—
to 6	over 6 to 10	over 10 to 24	to 30	over 30 to 60	over 60 to 100	over 100 to 150	over 150	⌒ ▱
±0.10	±0.15	±0.25	±0.2	±0.3	±0.5	±0.7	±1.0	0.05/10

ITEM	NAME OF PART	NO. OF PART	Q"TY	MATERIAL	NOTES
1	15EDGKM-3.5-Housing	1014A0YXXA(H)	1	PA66	UL94V-0
6	2EDG "-"Screws	3 S000000980(H)	2	steel	$Cr^{3+}Zn$
5	15EDG "-"Screws	S000001360(H)	XX	steel	$Cr^{3+}Zn$
4	15EDG Brass cage	X000000010(H)	XX	Brass	Ni plated
3	15EDG Clamp	1001B00010(H)	XX	Phoshor Bronze	Ni plated
2	15EDGK-3.5 Cover	1001C0YXXA(H)	1	PA66	UL94V-0

DETACHED LISTS

MM (INCH)

TOLERANCES EXCEPT AS NOTED

MM	
.0 ±	±
.00 ±	±
.000 ±	±

ANGLES ± 1°

THIRD ANGLE PROJECTION

DFTO Zhuwm	DATE 01/10/'05	
CHKD	DATE	
MFO	DATE	
APPVL	DATE	
MATERIAL :		
G.E :		
FINISH :		
SCALE : 1:1		

DEGSON®

宁波高正电子有限公司
DEGSON ELECTRONICS CO., LTD

NAME 15EDGKM-3.5-XXP-1Y-00A(H)

DRAWING NO. 15EDGKM-3.5-E01 /PART NO.

SIZE A3 REV T6 04/21/09"

DO NOT SCALE DRAWING

SHEET 1 OF 1