D1RFRD006

REVISION RECORD				
REV	ECN	DESCRIPTION	DRFT	DATE
2		Drawing Revise	Haoyh	03/27/06
3		增加VDE、CE标志	LJH	11/12/07"
4		增加CQC标志	Yej	02/10/09"
5	10-0246	UL电流由10A变更为15A	Lasting	08/05/10"

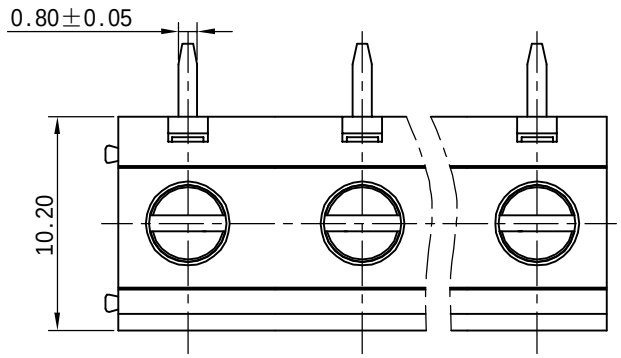

Notes:

1. Pitch:7.5mm ,Poles:2-XXP
2. Rated voltage/current:UL 300V/15A 5
   VDE 450V/18A
3. Operation temperatures:-40℃～+105℃
4. Withstanding Voltage:AC2000V/1Min
5. Insulation Resistance:5000MΩ/DC1000V
6. Wire Range:12～24AWG,2.5mm²
7. Max.Torque Value:M2.5,4.08kgf.cm
8. Undimensioned Tolerances:

Pitch range in mm			Naminal dimension range in mm					—
to 6	over 6 to 10	over 10 to 24	to 30	over 30 to 60	over 60 to 100	over 100 to 150	over 150	⌒ ▱
±0.10	±0.15	±0.25	±0.2	±0.3	±0.5	±0.7	±1.0	0.05/10

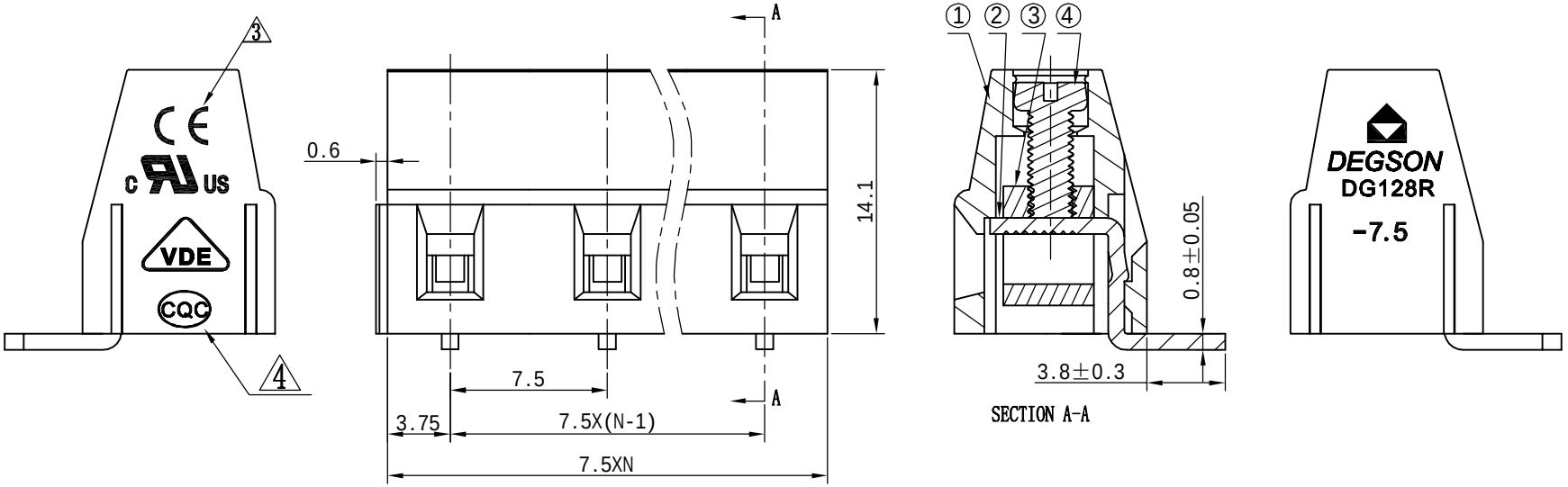

ITEM	NAME OF PART	NO. OF PART	Q"TY	MATERIAL	NOTES
1	DG128-7.5 Housing	4097A0YXXA(H)	1	PA66	UL94V-0
4	DG128 "一"Screw	S000001460(H)	XX	Steel	$Cr^{3+}Zn$
3	DG128 Cage	X000000020(H)	XX	Brass	Ni plated
2	DG128R Pin header	4027B00030(H)	XX	Brass	SnCe

MM (INCH)
TOLERANCES EXCEPT AS NOTED
MM
.0 ±
.00 ±
.000 ±
ANGLES ± 1°
THIRD ANGLE PROJECTION

DFTO Tongxc DATE 09/23/06"
CHKD DATE
MFO DATE
APPVL DATE
MATERIAL :
G.E :
FINISH :
SCALE : 1;1

DEGSON® 宁波高正电子有限公司 DEGSON ELECTRONICS CO., LTD

NAME
DG128R-7.5-XXP-1Y-00A(H)

DRAWING NO. DG128R-7.5-E02
/PART NO.
SIZE A3
REV T5 08/05/10"
DO NOT SCALE DRAWING
SHEET 1 OF 1