FOR-1351 Rev.1.0

REVISION RECORD				
REV	ECN	DESCRIPTION	DRFT	DATE

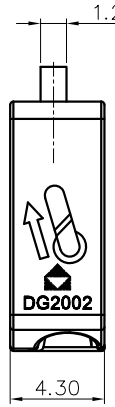

01P

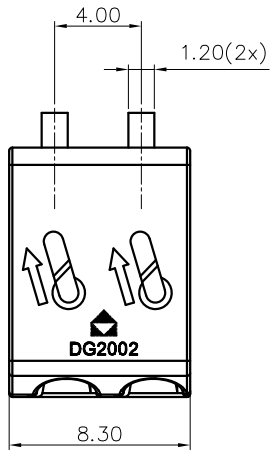

02P

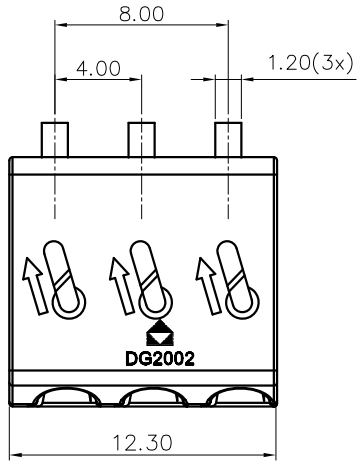

03P

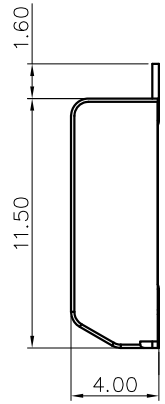

02P/03P

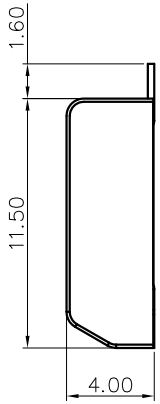

01P

NOTES1:

UL Standard

1.Rated Voltage/Current :600V/9A(01P)
300V/9A(02P/03P)

2.Wire Range : 24~18AWG

IEC Standard

1.

Pollution degree	3	2	2
Overvoltage category	III	III	II
Rate impulse voltage(KV)	4.0KV	4.0KV	4.0KV
Rate voltage(V)	32V	160V	160V
Rate current(A)	9A		

2.Wire Range :0.2~0.75mm^2

NOTES2:

1.Dimension shall be interpreted per ASME Y14.5-2009

2.Pitch : 4.00mm, Poles : N=01~03P

3.Stripping length : 9mm

4.Operating temperature: -40°C~+130°C

5.Undimensioned Tolerances:

Pitch range in mm			Nominal dimension range in mm					— ⌒ ⌭
TO 6	Over 6 TO 10	Over 10 TO 24	TO 30	Over 30 TO 60	Over 60 TO 100	Over 100 TO 150	Over 150	0.1/10
								∠
±0.15	±0.20	±0.30	±0.30	±0.50	±0.70	±1.00	±1.30	±2°

6.RoHS Compliance

DG2002 - 4.0 - XXP - 1Y -100A (H)

- DG2002: (Series No.)
- 4.0: (Pitch)
- XXP: (Poles)
- 1Y: (Single Pitch)
- 100A: (Color):1.(Grey) 3.(Black)
- (H): (RoHS)
- 100A: (Standard)

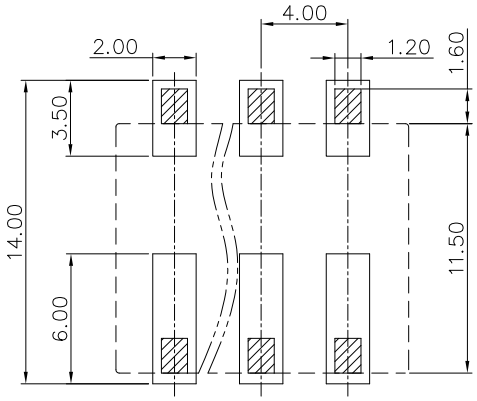

PCB LAYOUT

DETACHED LISTS	PART NO.: /	DEGSON® 宁波高松电子有限公司 NINGBO DEGSON ELECTRICAL CO., LTD	
	APPD: /	NAME: DG2002-4.0-XXP-1Y-100A(H)	
	CHKD: /		
	DRFT: /	TITLE: CUSTOMER DRAWING	REV: DO
	THIRD ANGLE PROJECTION	DRAWING NO.: /	SHEET: 1/1
		MM (INCH) DO NOT SCALE DRAWING	SCALE: 1:1